Introducing the *TLSE*

Hinged Twist Lock

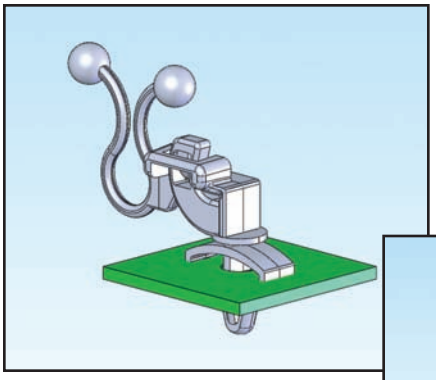

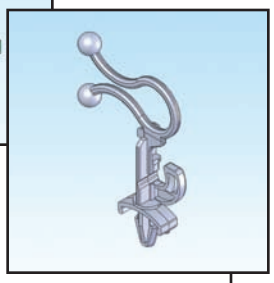

Features and Benefits

- Cables can be mounted with the clips in two different positions
- The first position allows the cable to be inserted into the side of the clamp. The standoff feature allows for the cables to be mounted above crowded boards and panels
- The hinged positions allows cables to be mounted to the side of the mounting device and board
- Hinge device minimizes volume of parts during transportation
- Lock and Un-lock cables by simply twisting the ends together
- Optional use of anti rotation pin prevents the parts from twisting on the board

Markets

- General Electronics
- Gaming Machines
- Vending Machines
- Appliance
- Medical Equipment

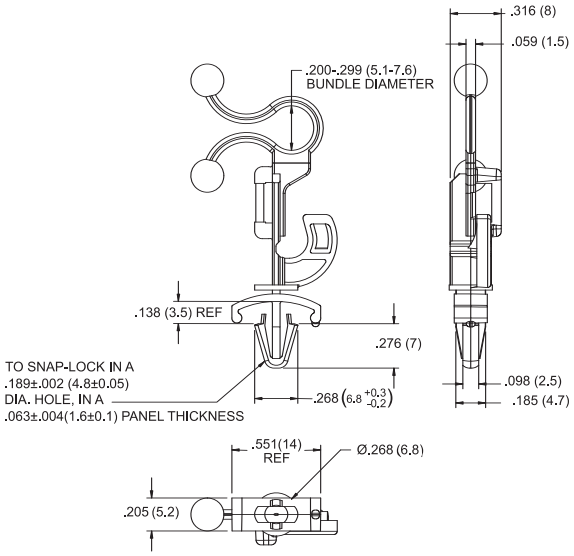

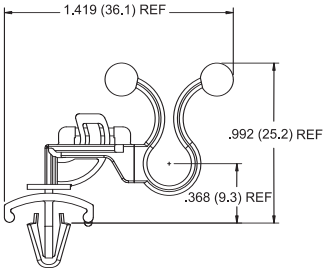

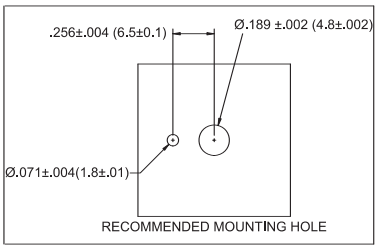

Other Related Richco Product Solutions

WTLH

TLH

STL

TL

SKLO

TLHS

ROHS✓

Mat'l: UL94 V0 Nylon 6/6, RMS-19 Color: Natural	Standard Pack: 1000 per bag
Part No.	TLSE1-250-19